SVI-737 MSX 300 BAUD MODEM WITH RS-232 INTERFACE

SVI-737 MSX 300 Baud Modem with RS-232 is a modem plus built-in RS-232 interface.

The Modem which is CCITT V21 compatible, can be directly coupled to telephone line. Auto-answering and full-duplex operation is carried out at 300 bps transmission rate. The RS-232 is Electronic Industrial Association (EIA) standard with selectable baud rate, word length, stop bits and parity bit.

SVI-737 is MSX compatible, you can connect it to SVI-728 or other MSX computer.

SPECIFICATION

Modem

Standard	:	CCITT V21 compatible
Data Rate	:	300 baud
Communication Mode	:	Asynchronous, full-duplex
Telephone Line Interface	:	FCC approved (pending) direct connection to 600 ohms line impedence
Modulation	:	Frequency shift keying (FSK)
Operation Functions	:	Originate - manual Answer - manual / automatic

Frequencies	:	Originate - mark : 978.8 Hz space: 1179.8 Hz Answer - mark : 1647.9 Hz space: 1847.7 Hz
Receiver Sensitivity	:	-48 dBm
Transmitter Output Level	:	0.7746V at 600 ohms line impendence

RS-232 Interface

Baud Rate	:	50 - 19200 bps (15 different baud rates)
Counter Channel Usage	:	CH0 - receive baud rate clock CH1 - transmit baud rate clock CH2 - used by application (e.g. time out counter)
Power consumption	:	+ 5V 250mA + 12V 30mA - 12V 28mA
Dimensions (mm)	:	170(L) x 123(W) x 32(D)

Specifications for product improvement are subject to change without notice.

SPARE PART LIST

GENERAL RECOMMENDED SPARE PART LIST FOR SVI-737 MODEM WITH RS232C INTERFACE CARTRIDGE

PART NO.	DESCRIPTION	FOB HONG KONG (US DOLLAR)
IC1488	IC 1488	0.40
IC1489	IC 1489	0.40
IC324	QUAD-AMP 324	0.50
IC4N29	OPTOCOUPLER 4N29	0.60
IC6234	TONE DIAL CHIP 6234	0.80
IC6926	MSM 6926 MODEM CHIP	9.10
IC8251A	8251A USART	1.80
IC8253	8253A PROGRAMMABLE TIMER	1.80
ID0001	IN4148:SILICON DIODE	0.10
ID0005	IN 4001 DIODE	0.10
IL04LS	74LS04	0.20
IL08LS	74LS08	0.20
IL138LS	74LS138	0.30
IL139LS	74LS139	0.30
IL174LS	IC 74LS174	0.30
IL273LS	74 LS273	0.70
IL32LS	74LS32	0.20
IL367LS	74LS367	0.30
IL38LS	IC 74LS38	0.20
IL74LS	74LS74	0.20
IM27643	2764 EPRON 300NS	3.40
IT0010	TRANSISTOR 9014C	0.10
IZ0007	5V ZENER 1/2W +/- 4%	0.10
KE2001025	ELECT CAP 1UF 25V	0.10
KE22200016	2.2 UF 16V TAN.CAP	0.10
KE3010025	ELECT CAP 10UF 25V	0.10
KM2010100	MYLAR CAP 0.01UF 100V	0.10
KM2100250	0.1U 250V CAP	0.10
KR1100050	100PF 50V NPO CAP.	0.10
KR1330050	C.CAP. 330PF 50V	0.10
KR2100016	0.1UF 16V CERAM CAP	0.10
MC014	SPST REED RELAY <3MA	0.80
MC3200184S	1.8432 MHZ X'TAL-SMAL	1.20
MP242	24 PINS IC SOCKET	0.10
MP252-1	RS232 SOCKET	1.50
MP282	28 PIN IC SOCKET	0.20
MPT04-1	TEL. SOCKET 4 PINS	0.50
RF1183	180 OHM 1/4W RESISTOR	0.10
RF1823	820 OHM RSTR 1/4W 5%	0.10
RF2103	1KOHM 1/4W +/-5%	0.10
RF2203	2.0K 1/4W 5% RESISTOR	0.10
RF2273	2.7K 1/4W 5% RESISTOR	0.10

GENERAL RECOMMENDED SPARE PART LIST FOR SVI-737 MODEM WITH RS232C INTERFACE CARTRIDGE

PART NO.	DESCRIPTION	FOB HONG KONG (US DOLLAR)
RF2333	3K3 1/4W 5% RESISTOR	0.10
RF2393	3.9K OHM 1/4W +/-5%	0.10
RF2683	6K8 OHM 1/4W +/-5%	0.10
RF3103	10K OHM 1/4W +/-5%	0.10
RF3153	15K OHM 1/4W +/-5% RESIST	0.10
RF3183	18K OHM 1/4W +/-5% RESIST	0.10
RF3203	20K OHM 1/4W +/-5%	0.10
RF3333	33K 1/4W 5% RESISTOR	0.10
RF4103	100K OHM 1/4W +/-5%	0.10
RF4473	470K OHM 1/4W +/-5%	0.10
RF5102	1M OHM +/-5% 1.4W	0.10
RV2101	1K OHM VARIABLE-RESISTOR	0.10
SP73701-01	PCB MSX CARD FORMAT	3.00
TA0005	X'FORMER 1:1, 600 MATCH	0.20
WA003	QC LABEL	0.10
WA019	QC LABEL (WHITE)	0.10
WA088	FCC LABEL	0.10
WN727002	REAR COVER	0.30
WN737001	MSXRS232 & MODEM F.COVER	0.30
XS050	TS/PH SCREW D3X8	0.10
XS054	MS/PH SCREW M3X0.5PX8	0.10
DD757101	5 1/4" BLANK DISK 48TPI	1.40
MJ73701	4 WIRE TEL. CABLE D.SIDE	0.40
PC737101	EXPORT CARTON	0.10
PG737101	G/B FOR MSX 232 & MODEM	0.30
PI318104(S)	GUARANTEE CARD (SVI)	0.10
PI737101	MSX 232 & MODEM MANUAL	0.50
PI757102	RS232 SOFTWARE MANUAL	0.40
PP727101	POLYFOAM FOR MSX CARD	0.20
PP727102	POLYFOAM BOTTOM	0.20
PZ638002	MODEM PVC BAG	0.10
WA125	SERIAL NO LABEL - 737	0.10
WA126	CP/M SYSTEM DISK LABEL	0.10
	TOTAL:	37.20

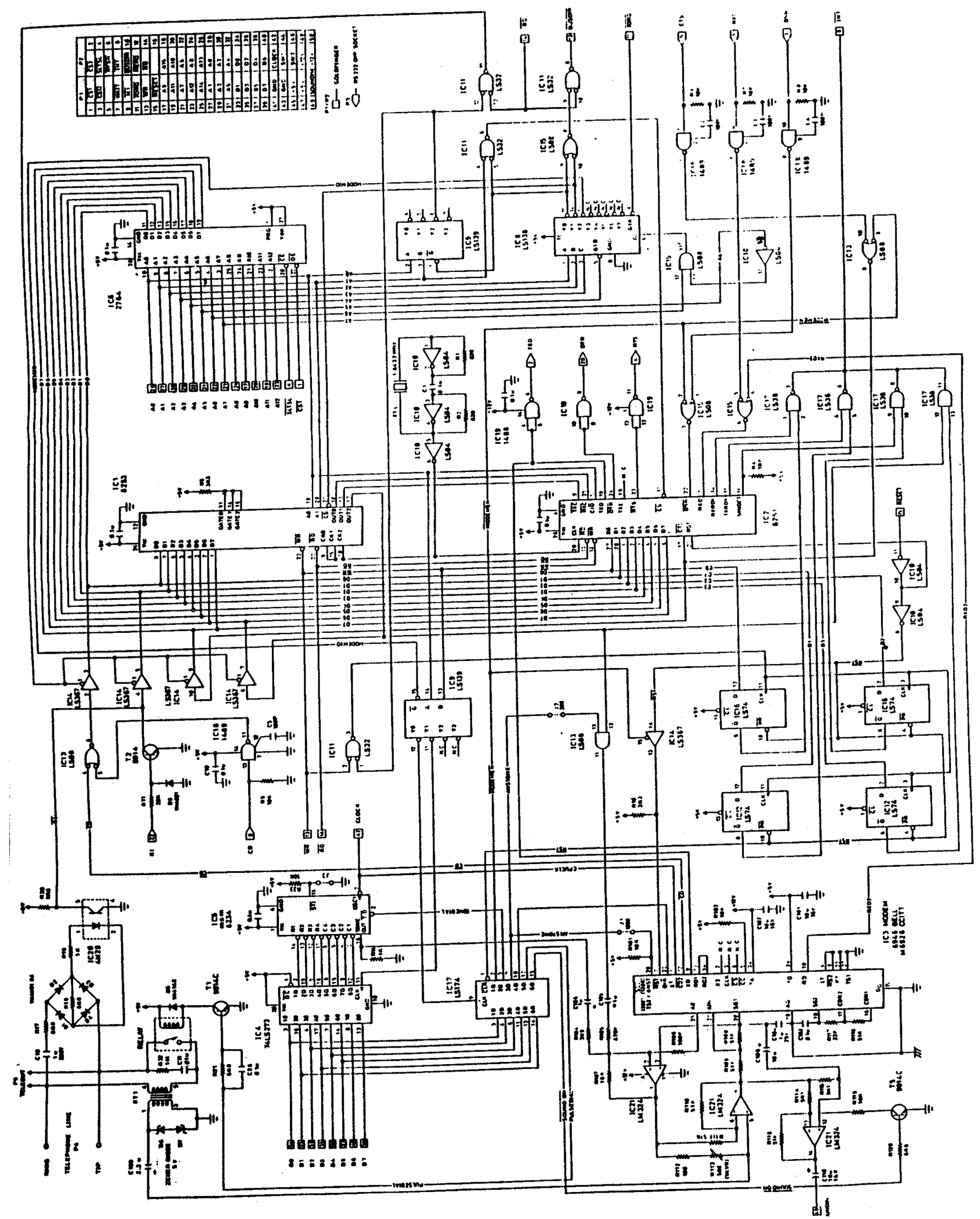
IC6 2764
IC1 8253
IC7 8251
IC4 74LS273
IC17 LS374
IC3 MODEM 6946 BELL M6826 CCITT
IC21 LM324
IC20 4028
T1 BD140
T2 BD140
T3 BD140
RELAY
TELEPHONE LINE
TIP
RING
RS232 DPP SOCKET
COLDPINHEAD
DATA BUS
ADDRESS BUS
CLOCK
RESET
SOUND ON
PULSE DIAL

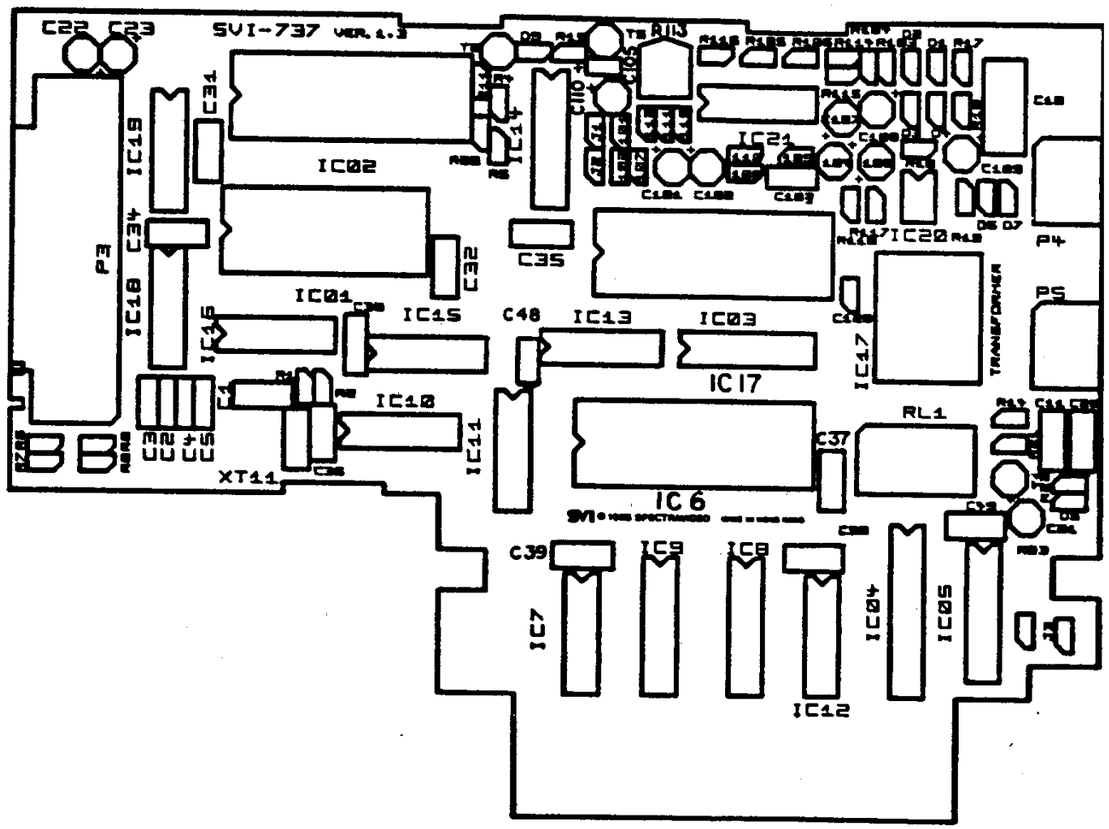
SVI-737 VER.1.3
C22
C23
C31
IC19
IC02
C34
P3
IC18
C32
C35
IC01
IC15
C48
IC13
IC03
IC17
IC16
IC10
IC11
XT11
IC6
C37
RL1
C39
IC9
IC8
IC7
IC12
IC04
IC05
IC21
IC20
TRANSFORMER
P4
P5

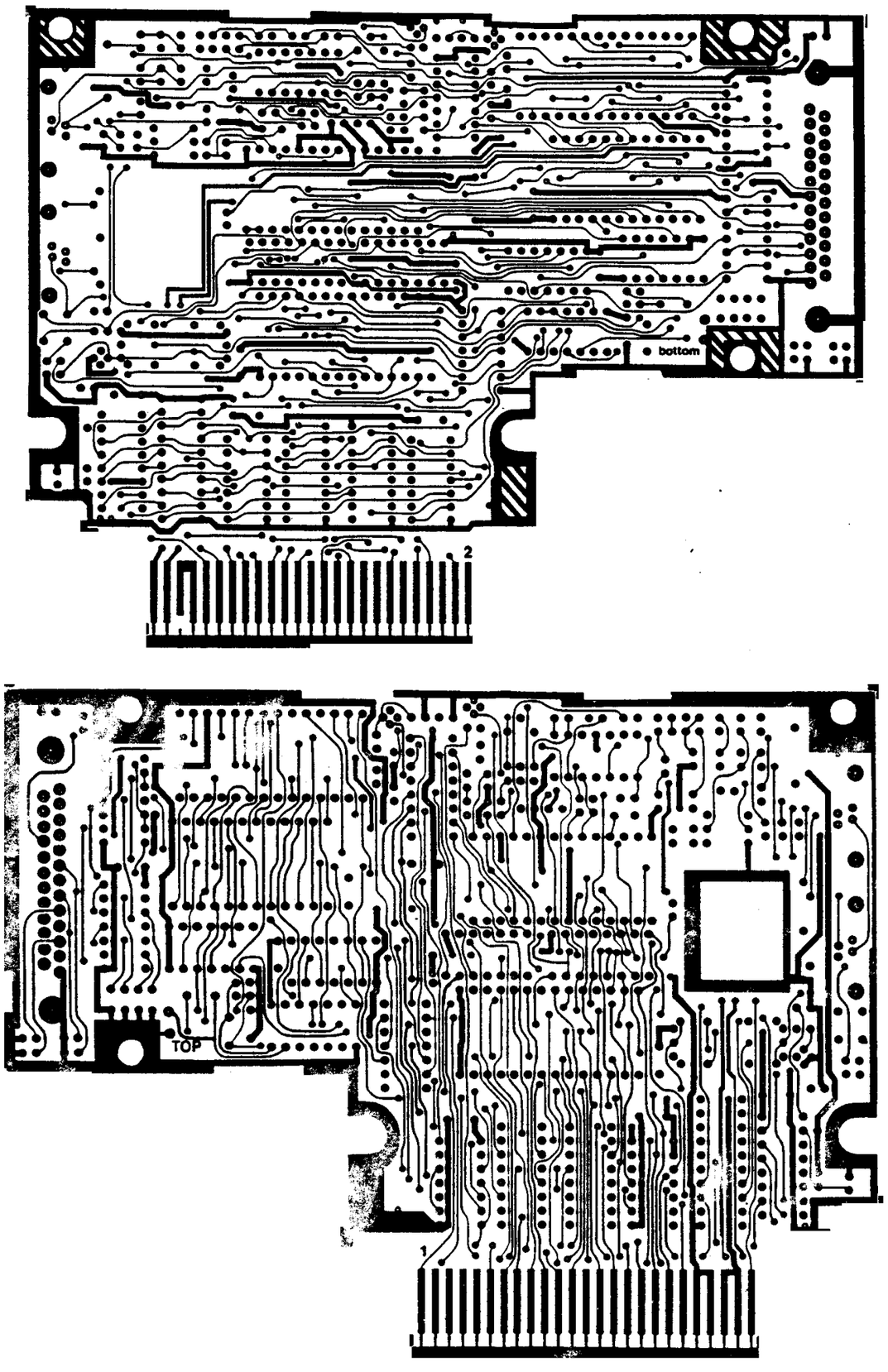
bottom
2
TOP
1